Kelvinator
COMMERCIAL

Refrigerated bases 2-Drawer Chef Base Refrigerator 50" Long

ITEM # _____

MODEL # _____

NAME # _____

SIS # _____

AIA # _____

738313 (KCHCB48R) 2-Drawer Chef Base Refrigerator 50" Long

Short Form Specification

Item No. _____

2-drawer Refrigerated base with exterior back panel, exterior side panels, and exterior control panel in 430 stainless steel, exterior bottom panel in galvanized steel; interior back panel in 430 stainless steel, interior bottom and interior side panels in 304 stainless steel. Top in 304 stainless steel. Electronic temperature control.

Marine edge stainless steel countertop supports up to 1089 lbs. (493.96 kg)

Stainless steel drawer slides support up to 152 lbs. (69 kg) static capacity

R290 gas in the refrigeration circuit.

ETL Safety and Sanitation certified.

3/5 Years warranty

APPROVAL: _____

Main Features

- External temperature display.
- Heavy-duty construction with 1,089 lbs. load capacity on top.
- Cabinet completely insulated with high density polyurethane for low environmental impact.
- Reccomended maximum temperature on worktop surface is 572°F.
- Insulation of the top guaranteed thanks to the Integrated ceramic fiber heat shield.
- Removable gasket for easy cleaning operations.
- Fin & Tube Condenser improves performance in high temperature environments.
- Automatic Defrost Cooling System provides worry-free performance.
- Electronic Temperature Control, quick and simple to set, with control display for easy monitoring.
- Marine edge top, for containing spills
- Removable rubber bumper guards for airflow spacing and shock absorption
- Drawer slides support up to 152 lbs. static capacity.

Construction

- Ceramic insulated top
- Pre-wired heavy duty power cord.
- Stainless steel interior and exterior, durable and easy to clean for daily commercial use.
- Heavy duty casters.
- Magnetic gasket removable without tools for easy cleaning.
- Heavy duty drawer runners.

Sustainability

- CFC and HCFC free, highly ecological refrigerant type: R290 (ecological gas in foam: cyclopentane). Hydrocarbon refrigerant gas R290 for the lowest environmental impact (GWP=3), to reduce green house and ozone depletion effects.
- High efficiency components to minimize the energy consumption still guaranteeing the highest performances.
- Hydrocarbon refrigerant gas R290 for the lowest environmental impact (GWP=3) - CFC and HCFC free.
- 50 mm insulation for energy saving.

Optional Accessories

- 1 ADJUSTABLE FOOT PNC 206445 ❑

Refrigerated bases
2-Drawer Chef Base Refrigerator 50" Long

Kelvinator COMMERCIAL

Front

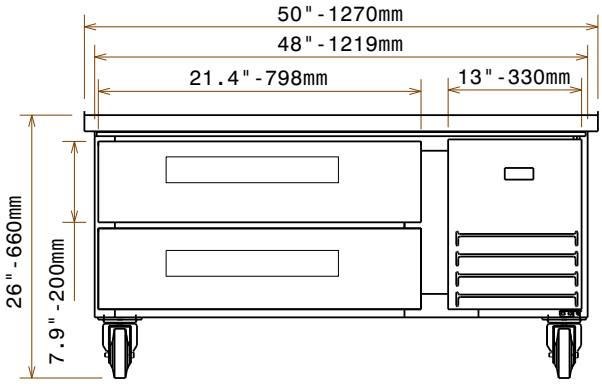

Side

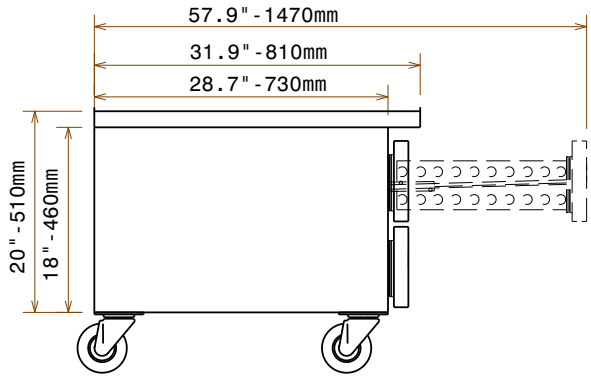

EI = Electrical connection

Top

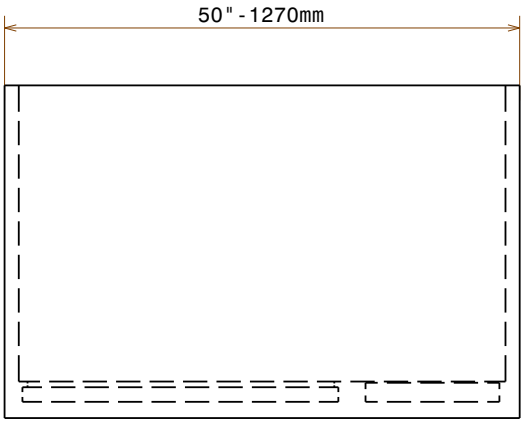

Electric

Supply voltage:	115 V/1 ph/60 Hz
Electrical power, max:	0.22 kW
Plug type:	USA NEMA 5-15P

Capacity:

Gross capacity:	6.74512 cu.feet

Key Information:

Warranty:	3 / 5 years
External dimensions, Width:	50 " (1270 mm)
External dimensions, Depth:	31 7/8" (810 mm)
External dimensions, Height:	26 " (660 mm)
Internal Dimensions (depth):	26 13/16" / (680.72 mm)
Internal Dimensions (height):	13 11/16" / (347.98 mm)
Internal Dimensions (width):	28 3/16" / (716.28 mm)
Net weight:	214 lbs (97 kg)
Shipping width:	32 7/8" (835 mm)
Shipping depth:	51 3/16" (1300 mm)
Shipping height:	28 3/8" (720 mm)
Shipping weight:	260 lbs (118 kg)
Shipping volume:	27.6 ft³ (0.78 m³)
N° of drawers:	2
Gross capacity:	191 lt

Refrigeration Data

Condenser type:	Fin & tube
Operating temperature min.:	32 °F
Compressor power:	1/5 hp
Operating temperature max.:	41 °F

Sustainability

Current consumption:	2.1 Amps
Refrigerant type:	R290
Refrigerant weight:	80 g

The company reserves the right to make modifications to the products without prior notice. All information correct at time of printing.

Intertek Intertek 3 YEAR PARTS & LABOR 5 YEAR COMPRESSOR WARRANTY 15A 125V NEMA 5-15P

Kelvinator Commercial is a pending or registered trademark of Electrolux Consumer Products, Inc., and is used under a license from Electrolux Consumer Products, Inc.

2026.03.07